RETROFITTING CENTRAL HVAC SYSTEMS: CASE STUDIES

Presented By

Mr. Joydeep Mukherjee
Regional Customer Care Manager
Voltas Limited Mumbai

A TATA Enterprise

17/12/2009

TOPICS COVERED

- VARIOUS RETROFITTING OPTIONS
- CASE STUDIES

A TATA Enterprise

17/12/2009

RETROFITTING OPTIONS

- Replacing of aged equipment, with energy-efficient ones
- Optimising outputs through input control based on AC load variations (introducing VFDs)
- Change in Airconditioning process
- Utilisation of waste heat (retrofitting of desuperheater)

A TATA Enterprise

17/12/2009

Replacement of old chiller packages with energy efficient chillers

Case Study I

Project Site: Sterling Cinema, Fort, Mumbai.
Existing Plant: (3+1) x 75 TR reciprocating w/c chillers
Replaced with: 2 x 100 TR w/c screw chillers
Other equipment: Existing pumps, cooling towers, pipelines were used with minor modifications.
Project Execution: By Voltas

A TATA Enterprise

17/12/2009

ENERGY SAVINGS & PAYBACK : Case I

Description	Screw chiller	Recip Chiller
Qty. x Capacity	2 x 100 TR	3 x 75 TR
IkW/TR	0.68	0.90
IkW	136	203
Opern hrs/day	13	11.5
Opern days/year	365	365
kWH/year	645320	852092
Energy savings	206773 units per year	
Savings/year [Tariff = Rs.13/-]	Rs.26,88,049/-	
Simple payback	23 months [CAPEX = Rs.51 Lakhs]	

A TATA Enterprise

17/12/2009

Optimising Output through Input Control based on AC Load variations

Case Study II

Project Site: EPCOS, Nashik. Execution: By Voltas

Retrofit Work Carried out: Introduced -

1. Primary and secondary chilled water circuits with constant flow primary pumps and variable flow, VFD controlled secondary pumps.
2. Installing 2-way flow control valves for the Airhandling Units

A TATA Enterprise

17/12/2009

Optimising Output through Input Control based on AC Load Variations

Case II (Contd.)

Working:

- 2-way valves are installed on the return water lines of the AHUs and these operate automatically based on the AHU return air temperature.
- The opening & closing of 2-way valve changes the pressure difference across the secondary chilled water pump, which is sensed by the Differential Pressure Transmitter (DPT).
- DPT in turn, gives signal to the VFD to change the frequency of the drive motor and thereby, reduce speed of the secondary pumps with consequent reduction in flow, matching the heat load.

A TATA Enterprise

17/12/2009

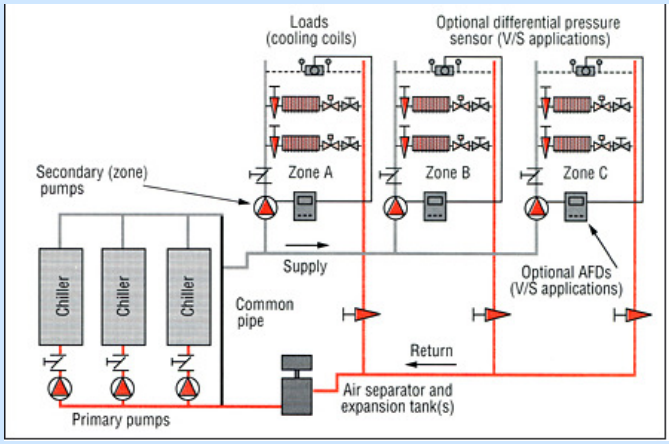

Typical Primary – Secondary Pumping System

A TATA Enterprise

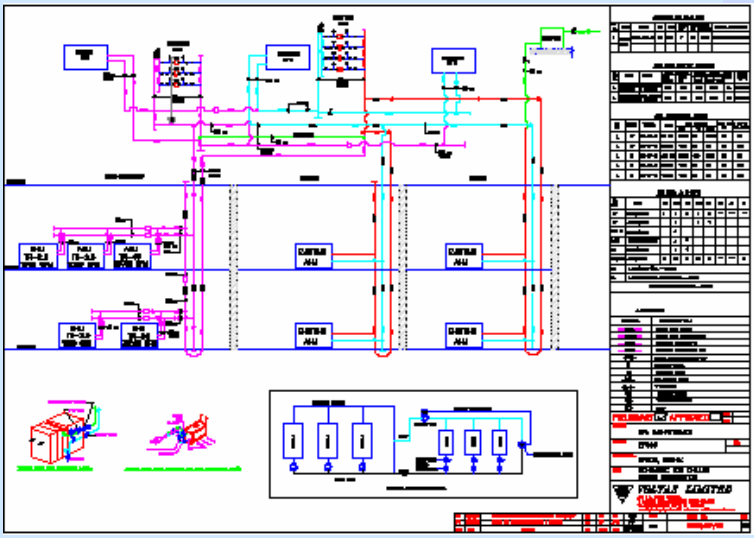

A TATA Enterprise

17/12/2009

ENERGY SAVING AND PAYBACK – CASE II

Description	Results
Savings in electrical consumption measured by EPCOS	650 kW/day
Operatings Days/year	300 days
Electrical Tariff per kW-hr	Rs.5.30/-
Savings per year	Rs.10,33,500/-
Simple payback period [CAPEX = Rs.16 Lakhs]	19 months

A TATA Enterprise

17/12/2009

CHANGE IN AIRCONDITIONING PROCESS

Case Study III

Project Site: Reliance Industry Ltd., Surat

Retrofit proposal: For converting 100% FA application to 80% air recirculation and lint control through use of proper air filters.

Project executed : By RIL.

A TATA Enterprise

17/12/2009

Change in Airconditioning Process (Contd.)

Project involved:

- **Conversion of the 100% FA AHU to 80% recirculatory, high static AHU**
- **Introduction of HEPA and Microvee filters in the RA path**

A TATA Enterprise

17/12/2009

Energy Savings & Payback – Case III

Description	Result
Savings in refrign. capacity	75 TR
Savings in power consumption	0.85 x 75 = 64 kW
Hours of operation per year	16 hrs / day x 290 days = 4640 hrs.
Elect. Tariff (2003)	Rs.2.90 per unit
Power saving / year	Rs.8.6 Lacs
Simple payback [CAPEX = Rs.12.85 Lacs]	18 months

A TATA Enterprise

17/12/2009

UTILISATION OF WASTE HEAT :

Case Study IV

Project: Retrofitting of desuperheater on to existing screw chiller for hot water generation.

A TATA Enterprise

17/12/2009

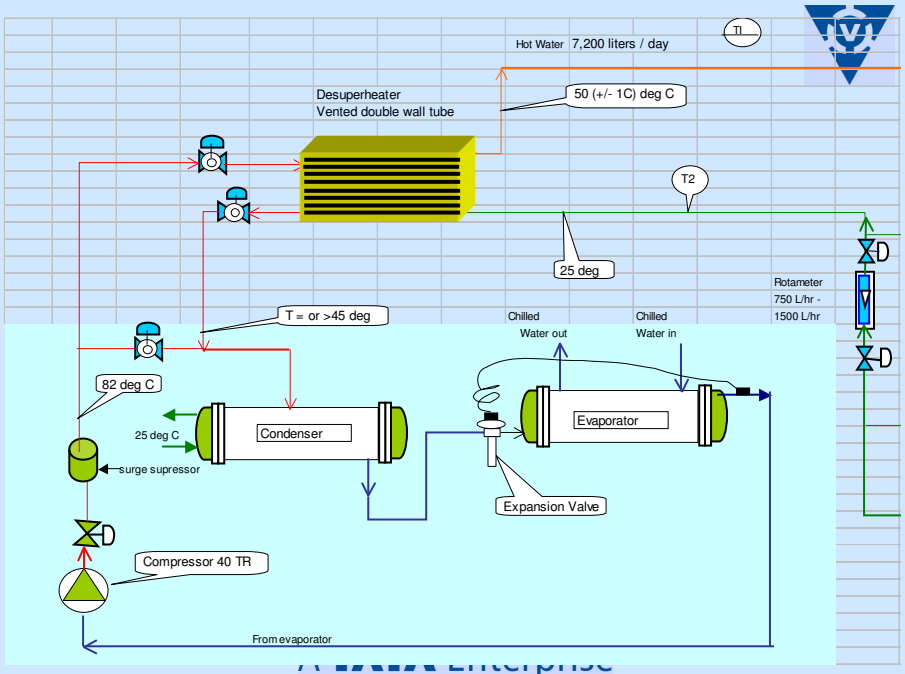

17/12/2009

UTILISATION OF WASTE HEAT (Contd.)

- A desuperheater / side-arm condenser utilises the hot refrigerant gas temperature to produce hot water.
- Basically a shell and tube heat exchanger
- Heat that can be extracted is approx. 13% of the cooling load of the chiller.
- Hot water in / out temp is in the range of 45 / 55 deg C.

A TATA Enterprise

17/12/2009

UTILISATION OF WASTE HEAT (Contd.)

Project: Taj Mahal Hotel, Mumbai

Desuperheater to be fitted on: Existing 300 TR Dunham-Bush water cooled screw chiller.

Capacity of desuperheater: 118000 Kcal/hr

[CAPEX = Rs.10.41 Lacs, imported desuperheater]

Hot water flow rate: 200 LPM

Hot water in temp. = 45 deg C

Hot water out temp. = 55 deg C

A TATA Enterprise

17/12/2009

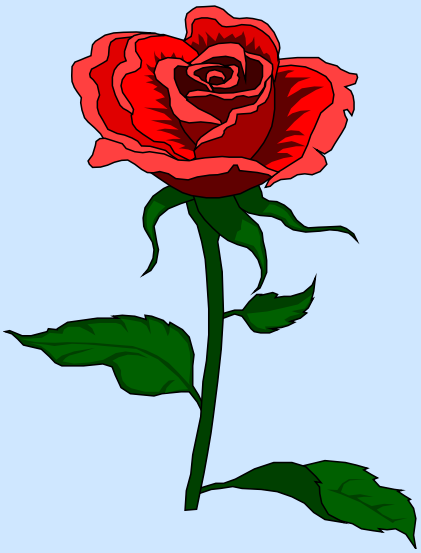

Thank You

A TATA Enterprise

17/12/2009